Cambridge International AS & A Level

Cambridge Assessment International Education
Cambridge International Advanced Subsidiary and Advanced Level

CANDIDATE NAME

CENTRE NUMBER

CANDIDATE NUMBER

4195154832

PHYSICS **9702/31**

Paper 3 Advanced Practical Skills 1 **May/June 2019**

2 hours

Candidates answer on the Question Paper.

Additional Materials: As listed in the Confidential Instructions.

READ THESE INSTRUCTIONS FIRST

Write your centre number, candidate number and name on all the work you hand in.
Write in dark blue or black pen.
You may use an HB pencil for any diagrams or graphs.
Do not use staples, paper clips, glue or correction fluid.
DO **NOT** WRITE IN ANY BARCODES.

Answer **both** questions.
You will be allowed to work with the apparatus for a maximum of one hour for each question.
You are expected to record all your observations as soon as these observations are made, and to plan the presentation of the records so that it is not necessary to make a fair copy of them.
You are reminded of the need for good English and clear presentation in your answers.

Electronic calculators may be used.
You may lose marks if you do not show your working or if you do not use appropriate units.

Additional answer paper and graph paper should be used only if it becomes necessary to do so.

At the end of the examination, fasten all your work securely together.
The number of marks is given in brackets [ ] at the end of each question or part question.

For Examiner's Use	
1	
2	
Total	

This document consists of **11** printed pages and **1** blank page.

© UCLES 2019

Cambridge Assessment International Education

You may not need to use all of the materials provided.

1 In this experiment, you will investigate the forces acting on a metre rule.

(a) • Set up the apparatus as shown in Fig. 1.1.

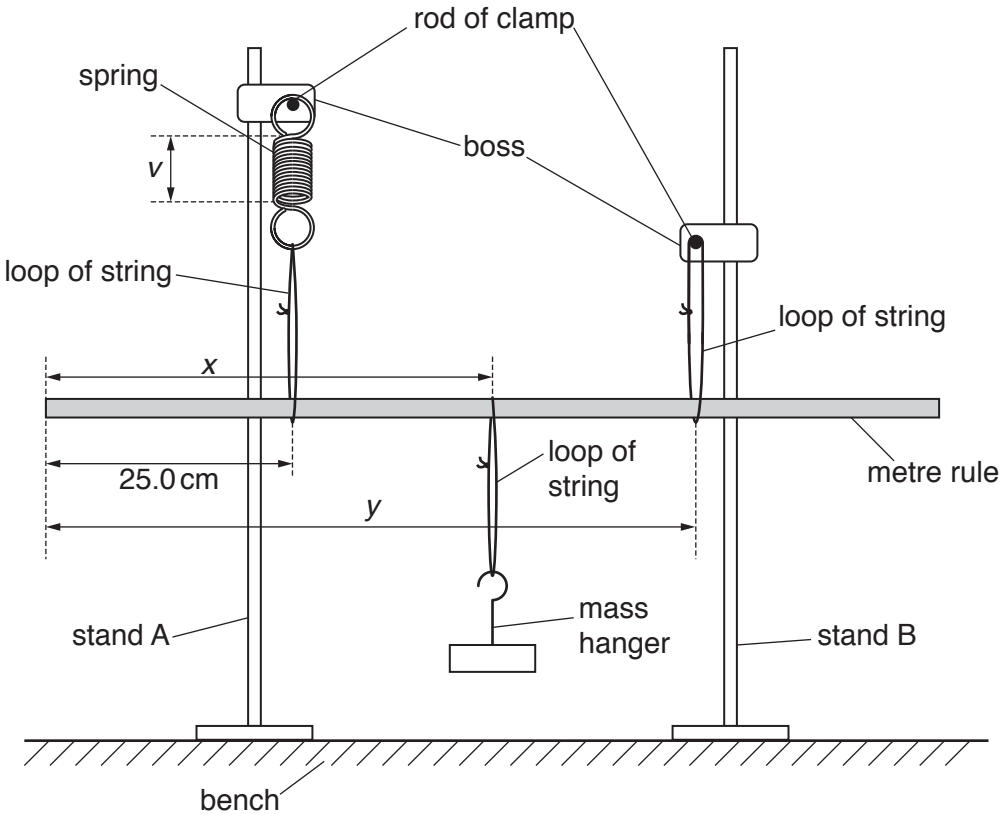

Fig. 1.1

• The distance between the end of the rule and the loop of string attached to the spring is 25.0 cm. **Keep this distance constant throughout the experiment.**

The distance between the end of the rule and the loop of string supporting the mass hanger is *x*.

The distance between the end of the rule and the loop of string attached to stand B is *y*.

Adjust the apparatus until $x = 50.0$ cm and $y = 75.0$ cm.

• The strings and spring should be vertical and the rule should be parallel to the bench.

The length of the coiled section of the spring is *v*. To view this more clearly, you may use the adhesive putty to attach the white card to stand A behind the spring.

Measure and record *v*.

v = ... [1]

© UCLES 2019

(b) • Change x by moving the loop of string supporting the mass hanger to a different position on the rule.

• Move stand B and slide the loop of string attached to stand B along the rule until ***v* has the same value as in (a)**.

• Ensure the strings and spring are vertical and the rule is parallel to the bench.

• Measure and record x and y.

$x =$ .....

$y =$ .....
[1]

© UCLES 2019

[Turn over

(c) • Write down your value of v from **(a)**.

v = ...

• Repeat **(b)** until you have six sets of values of x and y. Record your results in a table.

[8]

(d) **(i)** Plot a graph of y on the y-axis against x on the x-axis. [3]

(ii) Draw the straight line of best fit. [1]

(iii) Determine the gradient and y-intercept of this line.

gradient = ...

y-intercept = ...

[2]

© UCLES 2019

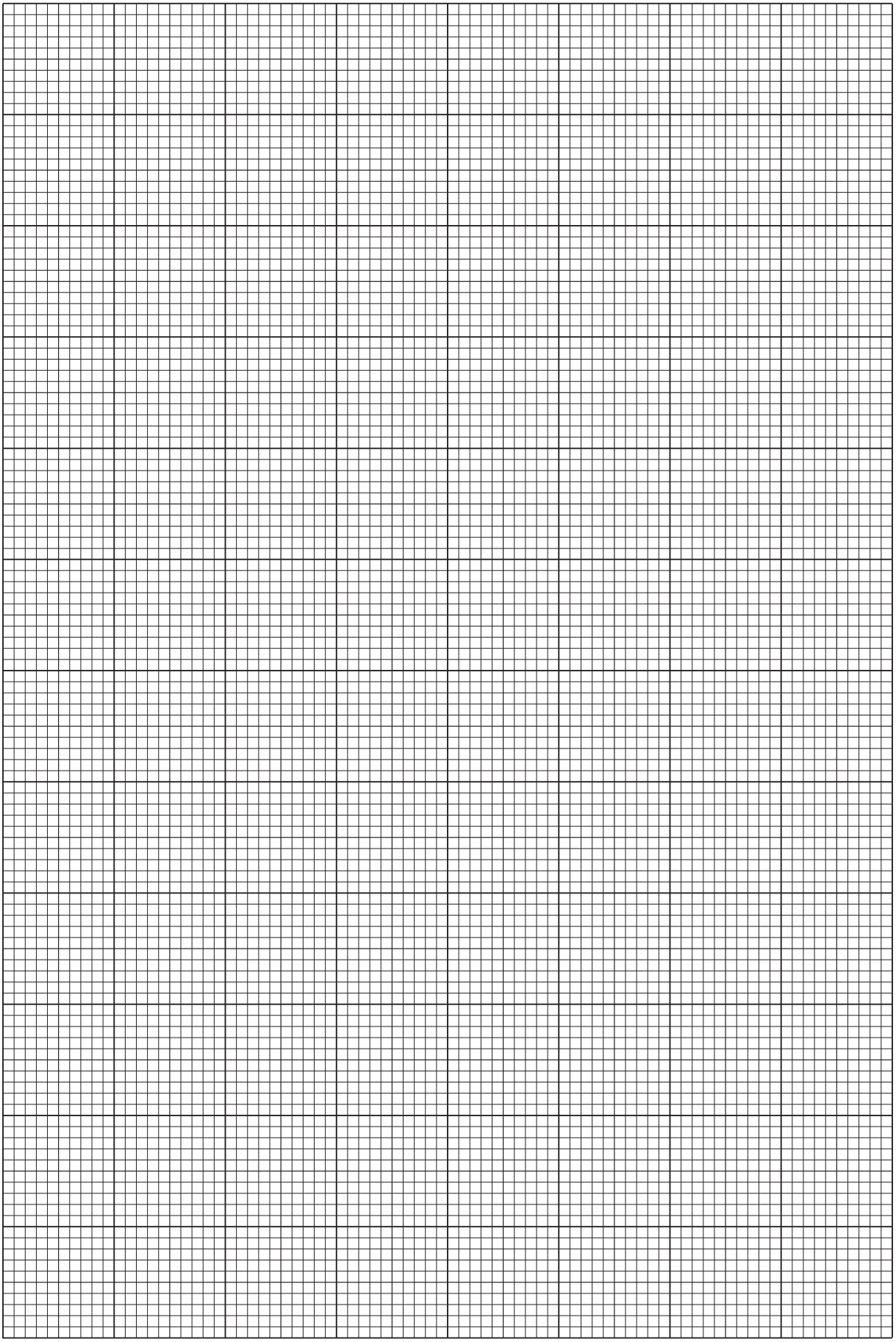

© UCLES 2019

[Turn over

(e) It is suggested that the quantities y and x are related by the equation

$$y = Px + Q$$

where P and Q are constants.

Using your answers in **(d)(iii)**, determine the values of P and Q.
Give appropriate units.

$P =$ .....

$Q =$ .....
[2]

(f) Theory suggests that

$$P = \frac{2m}{(R+m)}$$

where R is the mass of the metre rule and $m = 0.100$ kg.

Calculate R. Give your answer to three significant figures.

$R =$ ..... kg [2]

[Total: 20]

© UCLES 2019

You may not need to use all of the materials provided.

2 In this experiment, you will investigate the upthrust on lids placed in water.

(a) (i) You have been provided with two lids and some coins.

- Take the **larger** of the two lids.
- The diameter of the lid is *d*. The height of the lid is *t*, as shown in Fig. 2.1.

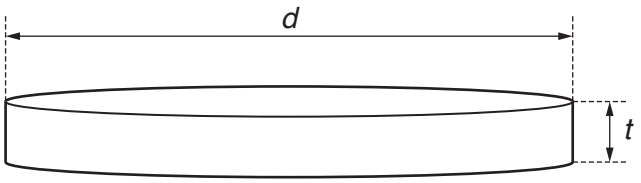

Fig. 2.1

Measure and record *d* and *t*.

d = ...

t = ...
[1]

(ii) Estimate the percentage uncertainty in your value of *d*.

percentage uncertainty = ... [1]

© UCLES 2019

[Turn over

(b) (i) The volume of the air space within the lid is V.

Calculate V where

$$V = \frac{\pi d^2 t}{4}.$$

$V =$ ..... [1]

(ii) Justify the number of significant figures that you have given for your value of V.

.....

.....

..... [1]

(c)
- Place the lid on the surface of the water so that it floats with its open face upwards.
- Add coins to the inside of the lid. After you have added n coins, the lid will sink.
- Record n.

$n =$ ..... [2]

© UCLES 2019

(d) Take the **smaller** lid and repeat **(a)(i)**, **(b)(i)** and **(c)**.

d = ...

t = ...

V = ...

n = ...
[3]

(e) It is suggested that the relationship between n and V is

$$n = kV$$

where k is a constant.

(i) Using your data, calculate two values of k.

first value of k = ...

second value of k = ...
[1]

(ii) Explain whether your results support the suggested relationship.

.....

.....

.....

..... [1]

(f) Theory suggests that

$$k = \frac{\rho}{M}$$

where the density ρ of water is $1.00\,\text{g}\,\text{cm}^{-3}$ and M is the mass of a coin.

Using your second value of k, calculate M. Give an appropriate unit.

M = ... [1]

© UCLES 2019

(g) (i) Describe four sources of uncertainty or limitations of the procedure for this experiment.

1. .....

.....

2. .....

.....

3. .....

.....

4. .....

.....

[4]

(ii) Describe four improvements that could be made to this experiment. You may suggest the use of other apparatus or different procedures.

1. .....

.....

2. .....

.....

3. .....

.....

4. .....

.....

[4]

[Total: 20]

© UCLES 2019

BLANK PAGE

Permission to reproduce items where third-party owned material protected by copyright is included has been sought and cleared where possible. Every reasonable effort has been made by the publisher (UCLES) to trace copyright holders, but if any items requiring clearance have unwittingly been included, the publisher will be pleased to make amends at the earliest possible opportunity.

To avoid the issue of disclosure of answer-related information to candidates, all copyright acknowledgements are reproduced online in the Cambridge Assessment International Education Copyright Acknowledgements Booklet. This is produced for each series of examinations and is freely available to download at www.cambridgeinternational.org after the live examination series.

Cambridge Assessment International Education is part of the Cambridge Assessment Group. Cambridge Assessment is the brand name of the University of Cambridge Local Examinations Syndicate (UCLES), which itself is a department of the University of Cambridge.

© UCLES 2019